Lecture 28: Generalized Momenta and Ignorable Coordinates

$$\text{Free Particle}: \begin{cases} T = \frac{1}{2}m\dot{x}^2 \\ V = 0 \end{cases} \implies \mathcal{L} = \frac{1}{2}m\dot{x}^2$$

Note that $\mathcal{L}$ does not depend on x

$$\implies \frac{d}{dt}\left(\frac{\partial \mathcal{L}}{\partial \dot{x}}\right) = \left(\frac{\partial \mathcal{L}}{\partial x}\right) = 0$$

$$\implies \frac{d}{dt}(m\dot{x}) = 0$$

This is the conservation of momentum law! Let's generalize this idea. For each generalized coordinate, the *generalized* momentum or *canonical* momentum is defined as

$$\boxed{p_i = \frac{\partial \mathcal{L}}{\partial \dot{q}_i}}$$

$$\text{Lagrange's equation becomes } \boxed{\dot{p}_i = \frac{\partial \mathcal{L}}{\partial q_i}}$$

If $\mathcal{L}$ does not depend explicitly on q_i (it's ok to depend on $\dot{q}_i$) then

$$\dot{p}_i = 0 \implies p_i = \text{constant} \qquad \text{“conservation law”}$$

We say that this missing coordinate is “ignorable” because we may use the p_i =constant equation to eliminate it.

Example: Pendulum Attached to a Movable Support

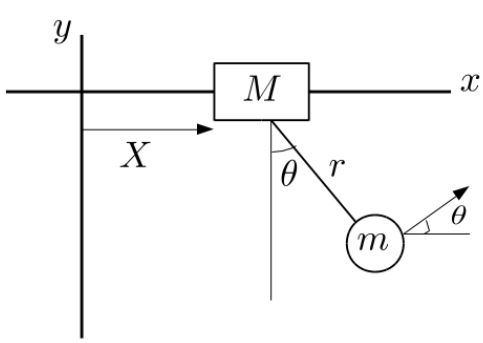

$$\mathcal{L} = \frac{1}{2}(m+M)\dot{X}^2 + \frac{1}{2}m(r^2\dot{\theta}^2 + 2\dot{X}r\dot{\theta}\cos\theta) + mgr\cos\theta$$

Note that $\dot{p}_X = \partial\mathcal{L}/dX = 0$ and hence X is "ignorable"!

$$p_X = \frac{\partial\mathcal{L}}{\partial\dot{X}} = [(M + m\dot{x} + mr\dot{\theta}\cos\theta)] \;=\; \text{constant}$$

That turns out to be simply the *total* linear momentum along x!

$$\dot{p}_\theta = \frac{\partial\mathcal{L}}{\partial\theta} = -m\dot{X}r\dot{\theta}\sin\theta - mgr\sin\theta = -mr(\dot{X}\dot{\theta} + g)\sin\theta$$

$$p_\theta = \frac{\partial\mathcal{L}}{\partial\dot{\theta}} = mr^2\dot{\theta} + mr\dot{X}\cos\theta$$

$$\dot{p}_\theta = mr^2\ddot{\theta} + mr\ddot{X}\cos\theta - mr\dot{X}\dot{\theta}\sin\theta \;=\; -mr\dot{X}\dot{\theta}\sin\theta - mrg\sin\theta$$

The final equality above comes from relating the two $\dot{p}_\theta$ equations. It follows that

$$\boxed{\ddot{\theta} + \frac{\ddot{X}}{r}\cos\theta + \frac{g}{r}\sin\theta = 0}$$

Check Limits: Assume X is fixed: $X = \dot{X} = \ddot{X} = 0$

$$\Longrightarrow \quad \ddot{\theta} + \frac{g}{r}\sin\theta = 0$$

Can $\dot{\theta} = \ddot{\theta} = 0$? If so, then

$$\frac{\ddot{X}}{r}\cos\theta = -\frac{g}{r}\sin\theta \quad \Longrightarrow \quad \boxed{\tan\theta = -\frac{\ddot{X}}{g}}$$

Hamiltonian Function and Hamilton's Equations

Consider the function

$$H = \sum_i \dot{q}_i p_i - \mathcal{L}$$

(Recall that $p_i = \partial\mathcal{L}/\partial\dot{q}_i$). Let's assume the system is conservative and $V = V(q_i)$ only. Let's also assume that $T(\dot{q}_i)$ is a quadratic function on $\dot{q}_i$, i.e

$$T(\dot{q}_i) = \frac{1}{2}\sum_{i,j} \alpha_{ij}\dot{q}_i\dot{q}_j$$

In this case $T(\dot{q}_i)$ satisfies the "homogeneous" property,

$$\sum_k \dot{q}_k \frac{\partial T}{\partial \dot{q}_k} = 2T$$

Check:

$$\begin{aligned}
\sum_k \dot{q}_k \frac{\partial T}{\partial \dot{q}_k} &= \sum_k \dot{q}_k \frac{1}{2}\left(\sum_j \alpha_{kj}\dot{q}_j + \sum_i \alpha_{ik}\dot{q}_i\right) \\
&= \frac{1}{2}\sum_{k,j} \alpha_{kj}\dot{q}_k\dot{q}_j + \frac{1}{2}\sum_{k,i} \alpha_{ik}\dot{q}_i\dot{q}_k \\
&= 2T
\end{aligned}$$

Therefore

$$H = \sum_i \dot{q}_i \frac{\partial T}{\partial \dot{q}_i} - (T - V) \;=\; 2T - T + V \;=\; T + V$$

H is the total energy! (Only when T satisfies the "homogeneous" property).

Suppose we take the definition of generalized momenta $p_k = \partial\mathcal{L}/\partial\dot{q}_k$ and use it to write

$$\dot{q}_k = \dot{q}_k(p_k, q_k)$$

This allows us to write

$$H = H(p_i, q_i) \;=\; \sum_i p_i \dot{q}_i - \mathcal{L}$$

Note: in general, H is not necessarily the energy (only when $\sum_k \dot{q}_k \frac{\partial T}{\partial \dot{q}_k} = 2T$). Now

$$\delta H = \sum_i \left[p_i \delta(\dot{q}_i) + \dot{q}_i \delta p_i - \frac{\partial \mathcal{L}}{\partial \dot{q}_i} \delta(\dot{q}_i) - \frac{\partial \mathcal{L}}{\partial q_i} \delta q_i \right]$$

$$= \sum_i \left[\dot{q}_i \delta p_i - \dot{p}_i \delta q_i \right]$$

But we can also write

$$\delta H = \sum_i \left[\frac{\partial H}{\partial p_i} \delta p_i + \frac{\partial H}{\partial q_i} \delta q_i \right]$$

$$\Longrightarrow \quad \begin{cases} \frac{\partial H}{\partial p_i} = \dot{q}_i \\ \frac{\partial H}{\partial q_i} = -\dot{p}_i \end{cases} \qquad \text{Hamilton's Equations of Motion}$$

These correspond to $2n$ 1st order differential equations.

Example: Harmonic Oscillator

$$\mathcal{L} = \frac{1}{2} m \dot{x}^2 - \frac{1}{2} k x^2 \quad , \quad p_x = \frac{\partial \mathcal{L}}{\partial \dot{x}} = m \dot{x}$$

$$H \;=\; \dot{x} p_x - \mathcal{L} \;=\; \frac{p_x}{m} p_x - \frac{1}{2} m \dot{x}^2 + \frac{1}{2} k x^2 = \frac{{p_x}^2}{2m} + \frac{1}{2} k x^2$$

$$\begin{cases} \frac{\partial H}{\partial p_i} = \dot{x} \\ \frac{\partial H}{\partial q_i} = -\dot{p}_x \end{cases} \Longrightarrow \begin{cases} \frac{p_x}{m} = \dot{x} \\ kx = -\dot{p}_x \end{cases} \Longrightarrow \begin{cases} p_x = m\dot{x} \\ \dot{p}_x = -kx \end{cases} \Longrightarrow \boxed{-kx = m\ddot{x}}$$